QT-600 Music and Paging Instructions

The QT-600 has 2 auxillary inputs that can be used for either music or paging. This document will provide guidance for making the proper connections and isolating problems with the set-up.
The input connection is via a 3-pin terminal connector, balanced or unbalanced input with 40K Ohm input impedance line level input (6V max).

To connect to a music or paging source to input A or B

1. Be sure power is OFF by unplugging power cord from wall outlet.

Below are the connection points for the QT-600

2. **Balanced Audio Input**:
(Most often, but not always the characteristic of paging systems.)
Connect signal wires to + and - at input A or B.
Connect the shield to GND at the audio source.

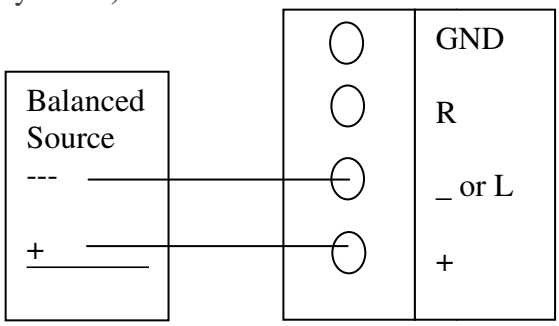

3. **Unbalanced Audio Input**: (Typical of music systems.)
A. Mono Signals:
Connect signal wire to both L and R. Connect the ground wire to GND.
B. Stereo Signals:
Connect signal wires to L and R. Connect the ground wire to GND.

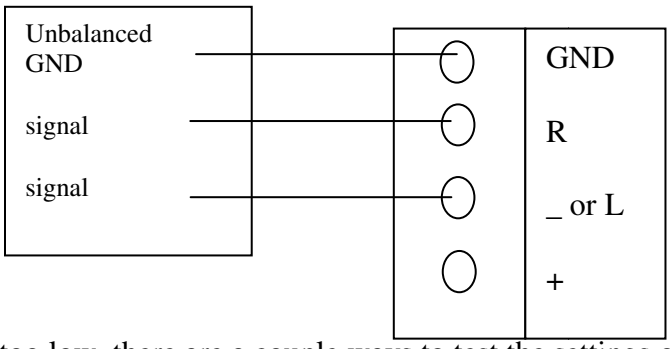

Trouble Shooting

If the volume of the paging system or music is too low, there are a couple ways to test the settings of the Qt-600.

Check the volume setting
The QT-600 is configured to mute both input A and B on delivery. Each zone has a volume level for these inputs. Set the volume level to 30 Max) for each zone to test if the sound is being transmitted.

Test the QT-600 operation

When the QT-600 is connected to a paging system and there is a volume issue, isolate the problem to the device. The quickest way to test the QT-600 is to connect the input to a music source like an Ipod or PC audio output.

- Take a 1/8" stereo cable or RCA cable that connects to the music source, strip back the main insulation ½" to expose the bare wire, as well as RED and White insulated wires.
- Separate the insulated conductors from the exposed outer strands, this is the ground
- Strip back the insulation of the internally insulated RED and WHITE cables 1/8". This is the signal "+" for the right channel and the signal "+" for the left channel. They connect to R and L respectively on the QT-600

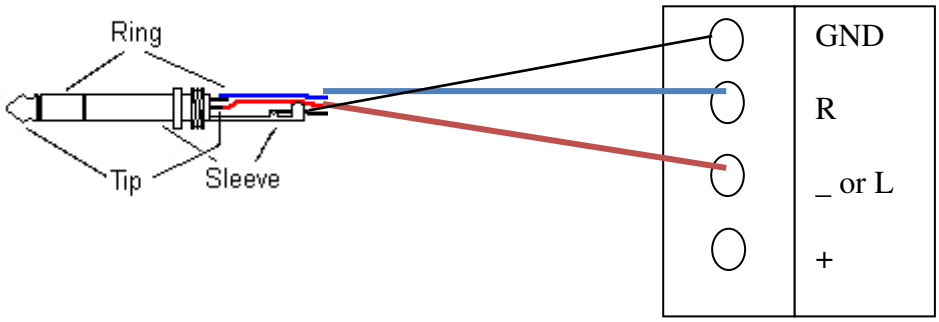

Important Note on Paging Signal

It is important to pay attention to the Qt PRO audio input requirements when implementing paging with your sound masking system. All Qt PROs require a dry, line-level signal from the paging source. The specification for a Nominal U.S. pro audio line level signal is: +4 dBu, 1.228 (Vrms), 1.737 (Vpk). However Qt PRO can handle signals that are from ½ to 2 times U.S. pro audio line levels. "Dry" emphasizes that Qt PRO's paging inputs are not telephone interfaces and must never see dial tone, ringing voltage, battery current, etc. This means that a typical FXO/FXS output is NOT directly compatible and requires use of a third party paging controller.

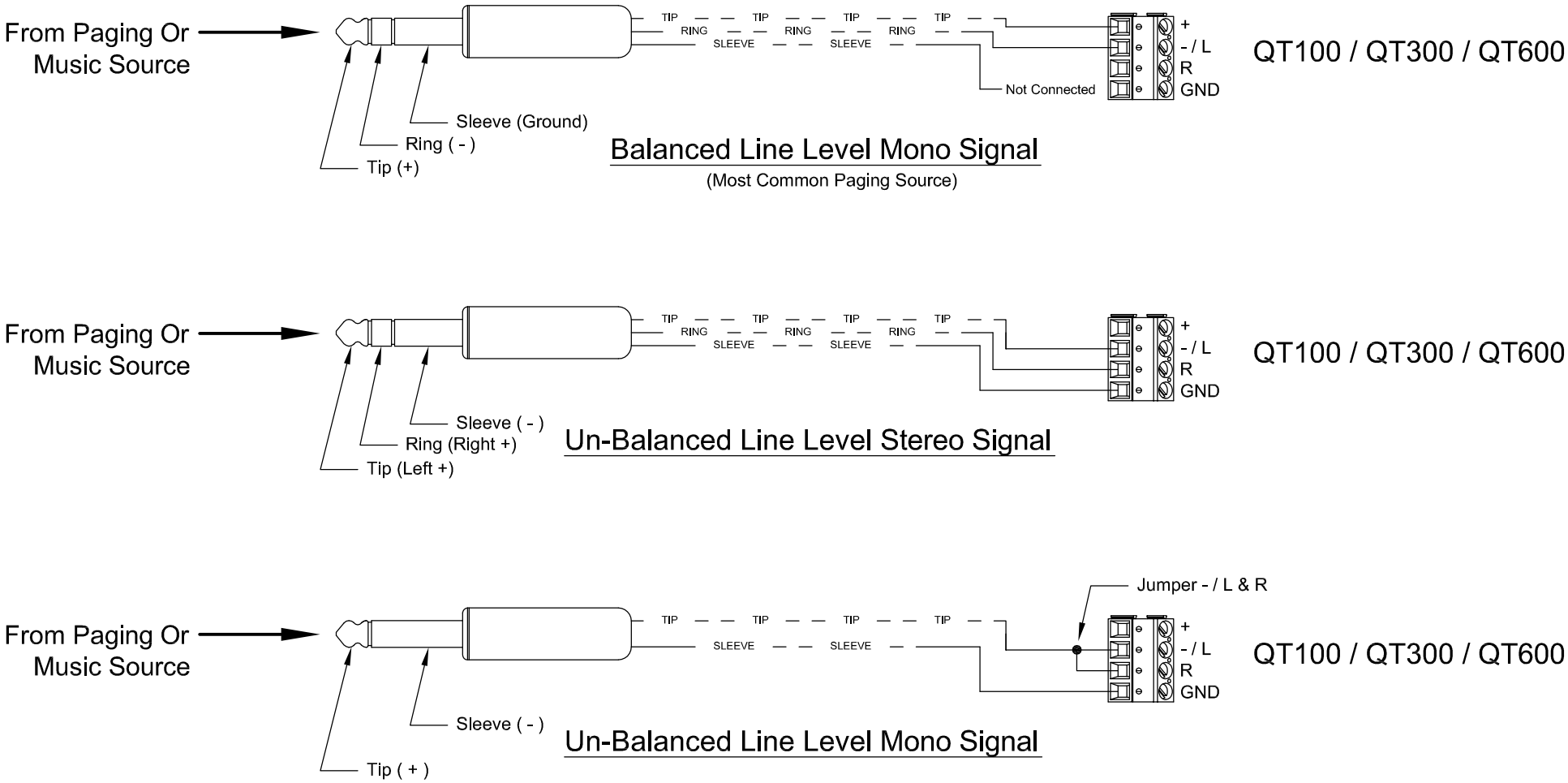

Notes:

1. QT Series nominal input impedance = 40k Ohms - 6 Volt Maximum.
2. QT Series nominal line level input = +4dBu (1.228 Volts RMS - 1.737 Volts Peak)
3. A telephone interface may be required for paging sources which supply a signal other than a US pro line levels.
4. Never directly connect a paging source with dial tone, ring voltage, battery current, etc to the paging / music inputs of "QT Series" masking processors.